# BFP6T
# TV Wall Mount

### Tilt Movement
This TV Wall Mount allows you to tilt your TV up and down

### Compatible TV Size
37-90”

This TV Wall Mount fits 37–90” (93–228cm) TV screens

### Maximum Mounting Pattern
400x800mm

This TV Wall Mount has a mounting hole pattern up to 400x800mm (HxW)

### Maximum TV Weight
HOLDS 75kg

This TV Wall Mount supports TVs weighing up to 75kg

## ⚠ SAFETY FIRST

1. Installation of this TV Wall Mount will be easier with two people.
2. Some images in this guide may vary slightly from the actual components supplied.
3. Ensure this instruction manual is completely read and understood before attempting installation.
4. This TV Wall Mount MUST NOT be installed solely in plasterboard, fibre cement and similar surfaces.
5. This TV Wall Mount MUST be installed in sound supporting structures such as those made of timber, steel or masonry using appropriate fasteners.
6. The supporting structure must be capable of sustaining the combined weight of the TV Wall Mount and the display otherwise the structure must be reinforced.
7. The fasteners supplied in this hardware pack allow for fixing into timber and masonry only. If installing into a supporting structure made of steel, appropriate fasteners must be used and sourced from an appropriate supplier.
8. Use appropriate tools and safety equipment and ensure adequate ventilation during installation.
9. If uncertain about any aspect of installation, contact The Crest Company or an installation professional.
10. Please retain these instructions for future reference.

## Hardware Kit Contents

| ITEM | DESCRIPTION | QTY | ITEM | DESCRIPTION | QTY |
|---|---|---|---|---|---|
| A | Wall Plate | 1 | M-I | D4 Washer | 5 |
| B | Left Mounting Arm | 1 | M-J | D5 Washer | 4 |
| C | Right Mounting Arm | 1 | M-K | D6 Washer | 4 |
| M-A | M4 x 12mm Bolt | 4 | M-L | D8 Washer | 4 |
| M-B | M4 x 30mm Bolt | 4 | M-M | Small Spacer | 8 |
| M-C | M5 x 12mm Bolt | 4 | M-N | Large Spacer | 4 |
| M-D | M5 x 30mm Bolt | 4 | W-A | Lag Bolt (ST8 x 63mm) | 6 |
| M-E | M6 x 12mm Bolt | 4 | W-B | Concrete Anchor | 6 |
| M-F | M6 x 35mm Bolt | 4 | W-C | D8 Washer | 6 |
| M-G | M8 x 16mm Bolt | 4 | Stud Finder with Spirit Level | | 1 |
| M-H | M8 x 40mm Bolt | 4 | | | |

# Tools Required

### DRYWALL INSTALLATION (TIMBER SUPPORTS):

- Adjustable spanner/socket set
- Philips head screwdriver
- Power drill
- High speed 5mm drill bit
- Pencil

### MASONRY INSTALLATION:

- Adjustable spanner/socket set
- Philips head screwdriver
- Power drill with hammer function
- 8mm masonry drill bit
- Pencil
- Hammer

# Using the Stud Finder with Spirit Level

### HOW IT WORKS:

- Use this stud finder on drywall (timber supports) only
- The stud finder accurately locates metal pipes, AC wires, studs and wooden frames
- The stud finder LED indicator flashes GREEN when an object is detected
- The stud finder can detect the depth of:

  WOOD: up to 20mm, wood should be detected based on the thickness of the drywall less than 20mm

  METAL: up to 50mm, metal should be detected based on the thickness of the drywall less than 50mm

  VOLTAGE: up to 70mm, AC wires should be detected based on the thickness of drywall less than 70mm

### INSTRUCTIONS:

1. Keep the stud finder in touch with the drywall.
2. Press the ON/OFF button until the LED indicator turns RED. Do not move the stud finder.
3. Wait 3 to 10 seconds until the LED indicator turns GREEN, then start moving the stud finder slowly on the drywall.
4. The GREEN LED indicator will start flashing when an object is detected.
5. Mark a point on the wall using your pencil, then continue moving the stud finder until the GREEN LED indicator stops flashing, mark another point on your wall.
6. The midpoint between the two marks on your wall is the centre of the stud.

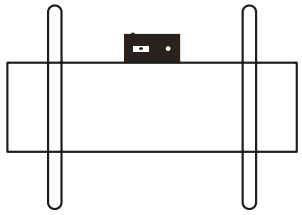

**Use the supplied stud finder with spirit level to level your TV Wall Mount before installation**

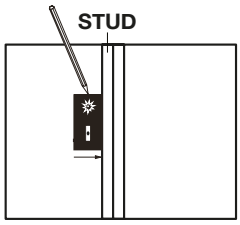


**Find the wood stud, metal or voltage before TV Wall Mount installation**

# Step 1: Attach Wall Plate to Wall

## A. INSTALLING IN DRYWALL (TIMBER SUPPORTS)

***WARNING: If attaching this TV Wall Mount using this method, you MUST spread the Wall Plate across 2 wall studs. Wall studs can be 450mm or 600mm apart depending upon the position of the wall and the geographical State you live in. The Crest Company will not accept any damages that may occur if only 1 stud is used.***

1. Locate the centre of 2 adjacent timber studs using the supplied stud finder with spirit level. (NOTE: You must use the centre of the stud to avoid cracking or splitting the timber during installation).
2. Mark a minimum of 4 fixing holes over stud centres using the Wall Plate as a guide - position 2 at either end of the Wall Plate (see Figure 1). Ensure plate is level.
3. Pre-drill holes to a minimum depth of 50mm using a high speed 5mm drill bit. If installing in hardwood, larger diameter and deeper holes may be required.
4. Attach the Wall Plate by inserting the lag bolts (W-A) through the D8 washers (W-C) and then through the Wall Plate. Do not over tighten.

## B. INSTALLING IN MASONRY

***WARNING: Ensure you have a minimum of 35mm of actual concrete or brick thickness in the hole for the anchors. Do not drill into mortar joints. Installer must verify that the supporting surface will safely support the combined weight of the TV Wall Mount and TV. The Crest Company holds no responsibility for incorrectly installed TV Wall Mounts.***

1. Mark a minimum of 4 fixing holes (preferably 6) using the Wall Plate as a guide - position 2 at either end of the Wall Plate (see Figure 2). Ensure plate is level.
2. Pre-drill holes to a minimum depth of 60mm using an 8mm masonry drill bit. Clean out holes.
3. Fully insert the concrete anchors (W-B) into the drill holes. Tap in with hammer if required.
4. Attach the Wall Plate by inserting the lag bolts (W-A) through the D8 washers (W-C) into each concrete anchor (W-B). Do not over tighten.

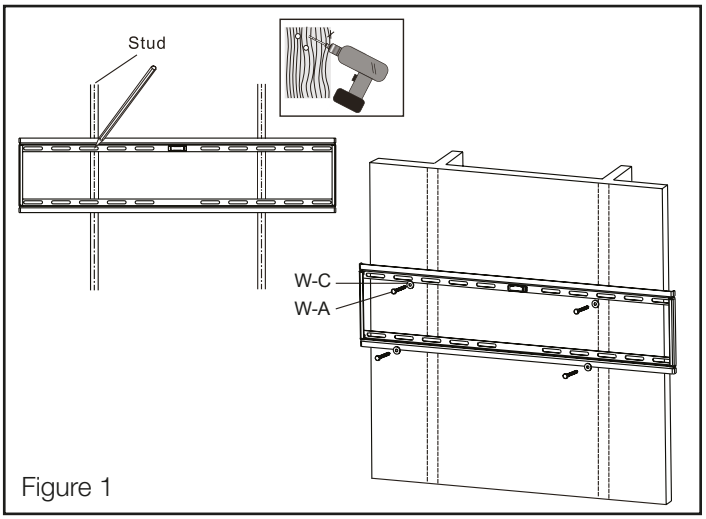

Figure 1

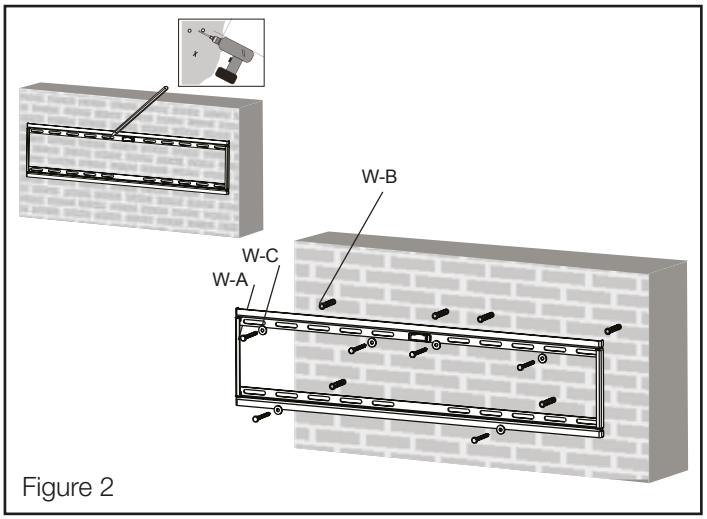

Figure 2

# Step 2: Attach Mounting Arms to TV

1. Using a second person for assistance, lay your TV face down on something soft so as not to scratch the TV screen.
2. Check the back of your TV to find the appropriate mounting pattern.
3. Sort through the provided bolts (M-A to M-H) until you find the correct size that easily fits into the back of your TV and fits snugly (the bolt must turn at least 3 full turns, do not tighten). If you feel resistance stop immediately and select a smaller bolt.

   Once you have selected the correct bolt, find the corresponding washer. If no bolts fit, you will need to go to your local hardware supplier to find the correct bolt and washer sizes.
4. Gently put your mounting arms (B and C) on the back of the TV so that the mounting pattern holes are showing through the mounting arm holes (see Figure 3). If the back of your TV is curved or recessed (see Figure 4 and 5) you will also need to use a spacer (M-M or M-N) depending upon the amount of space you are trying to clear. If using spacers you will need to use longer bolts. Remember that the bolt needs to turn at least 3 full turns.
5. Using the correct mounting bolt size and length, insert these through the corresponding washers (M-I to M-L) to attach the mounting arms to the rear of the TV (see Figure 6). To avoid damaging TV, do not over tighten bolts.
   *The Crest Company is not responsible for any damage caused by screwing the bolt too far into the back of the TV.*
6. Loosen the safety bolt at the bottom of each mounting arm (see Figure 7).

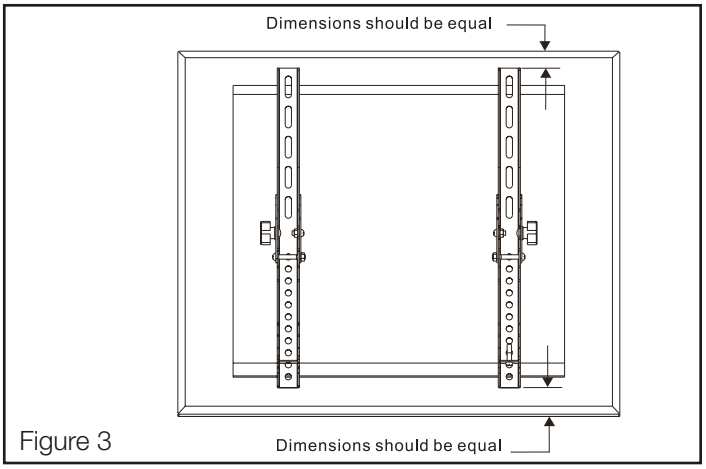

Figure 3

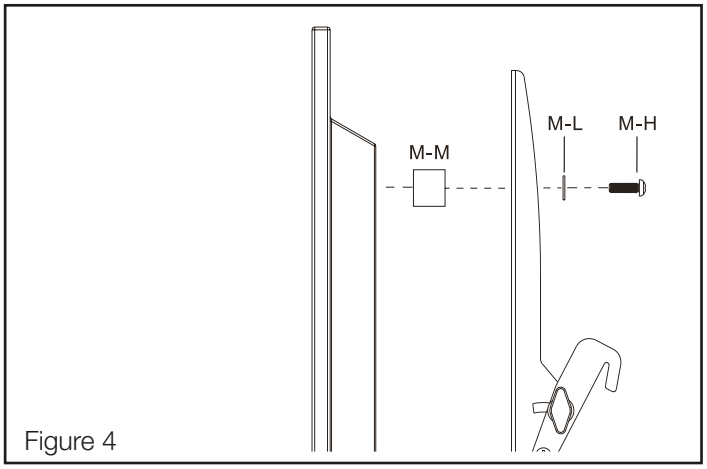

Figure 4

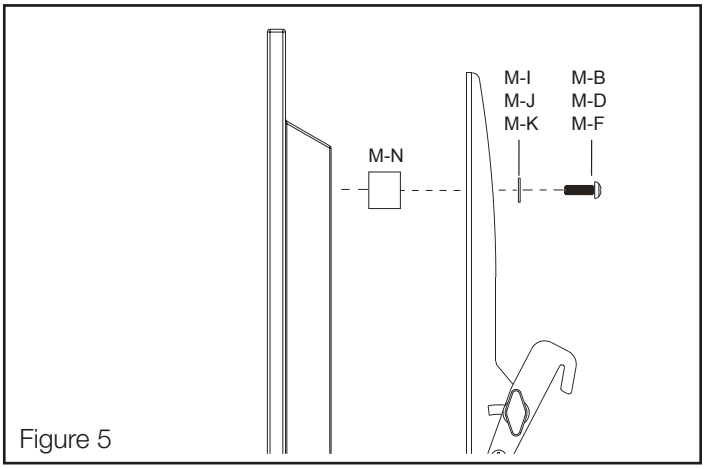

Figure 5

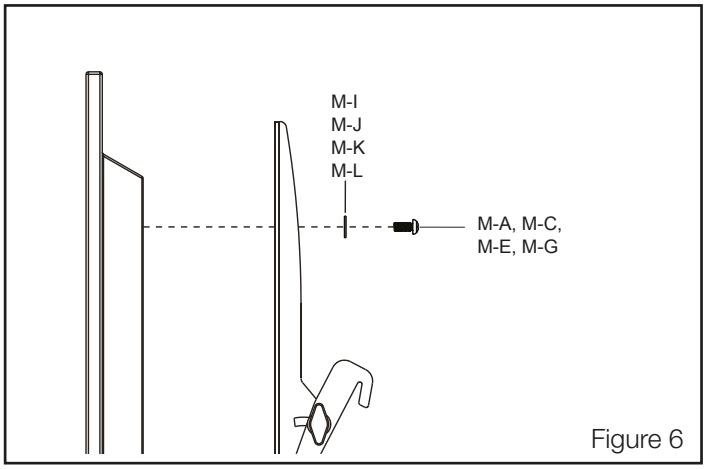

Figure 6

# Step 3: Hook Arms over Wall Plate

1. Using a second person for assistance, carefully lift TV and hook both arms over the Wall Plate (see Figure 7).
2. Tighten Safety bolts at bottom of mounting arms with a long neck Phillips head screwdriver.
   This will help ensure that your TV does not fall off your Wall Plate during use.
3. You may now adjust the angle of your TV for the best viewing angle. Use the tilt adjusting knob to adjust your TV to the desired angle between vertical and 10˚ down (see Figure 8).

*Check your TV Wall Mount is secure and safe to use at regular intervals (at least every three months).*

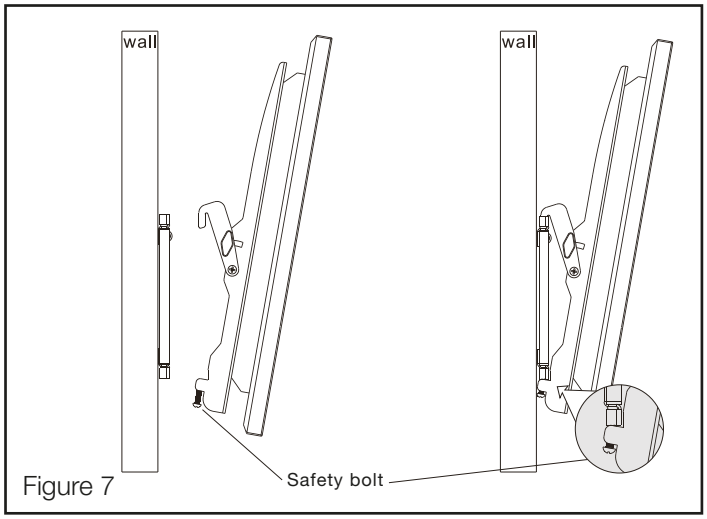

Figure 7

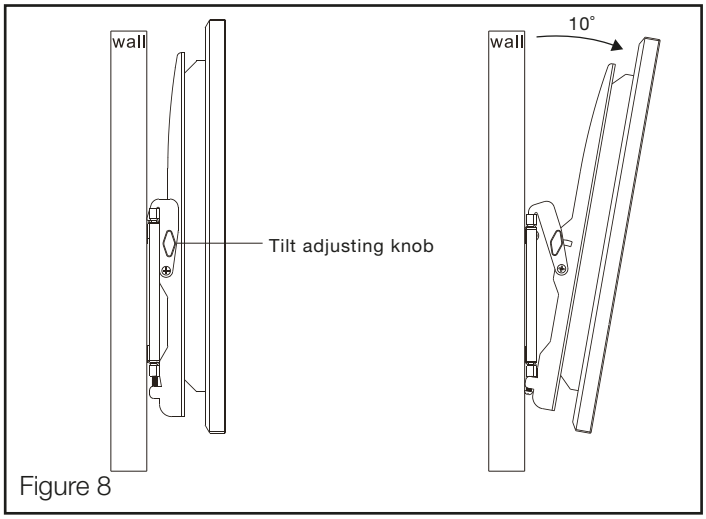

Figure 8

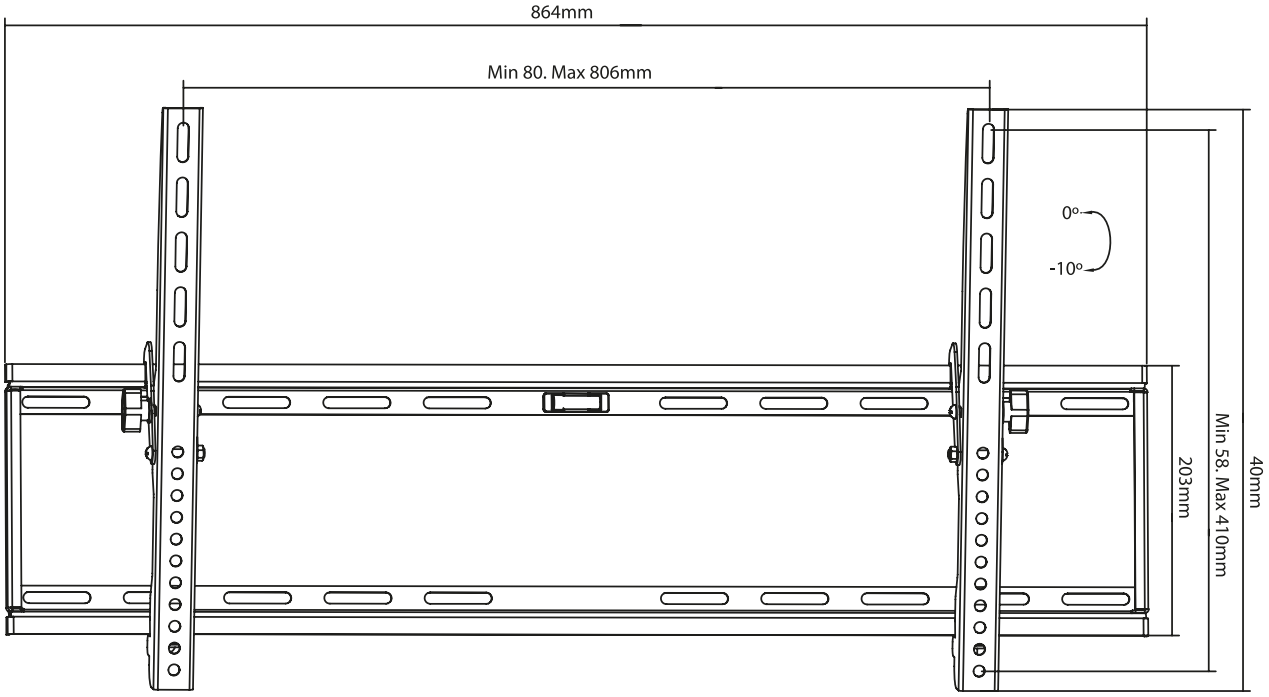


**5 YEAR WARRANTY**

Olbertz Holdings Pty Ltd ACN 010 003 933 trading as The Crest Company of 165 South Pine Road, Brendale, Queensland, 4500, Ph: 1800 812 261, www.crest.com.au, warrants that if this Crest product purchased by you from The Crest Company or a retail outlet is found by The Crest Company to be defective in workmanship or materials within 5 years of the date of purchase, The Crest Company will (at its election) either repair that product, replace the product, supply an equivalent product or pay the costs of repairing or replacing the product or acquiring an equivalent product.

This limited warranty will not extend to or cover any expenses associated with removing, demounting the original product or installing the repaired, replaced or equivalent product or all or any of its components, you must bear these expenses. It also does not cover damage or loss resulting from intentional or unintentional misuse of, tampering with, alterations to or incorrect installation of this product or use of this product for purposes other than that for which it is designed or in a manner inconsistent with the product's instructions. This limited warranty also does not apply to damage or loss resulting from fair wear and tear or events beyond The Crest Company control including but not limited to natural disasters.

In order to claim under this warranty, you must contact The Crest Company and return to The Crest Company (via our nominated reply paid address) the product and its components and proof of purchase (including the date and location of purchase) so that The Crest Company can verify the defect and your purchase.

Our goods come with guarantees that cannot be excluded under the Australian Consumer Law. You are entitled to a replacement or refund for a major failure and compensation for any other reasonably foreseeable loss or damage. You are also entitled to have the goods repaired or replaced if the goods fail to be of acceptable quality and the failure does not amount to a major failure. The benefits given by this warranty are in addition to other rights and remedies which you may have under a law in relation to the goods or services to which the warranty relates.

Proudly brought to you by:

THE crest COMPANY

PO Box 5658 Brendale
QLD Australia 4500

**Customer Support**
**1800 812 261**
**www.crest.com.au**

**AUSTRALIAN OWNED**

1323